Electrolux PROFESSIONAL

High Productivity Cooking Electric Rectangular Braising Pan, 110lt, Hygienic Profile, with Backsplash & Tap

ITEM #

MODEL #

NAME #

SIS #

AIA #

586731 (PFEN11EKEM) Electric Braising Pan 110lt (h), rectangular with mixing tap, GuideYou panel, backsplash

Short Form Specification

Item No.

AISI 304 stainless steel construction. Pan in AISI 304 stainless steel; 18mm thick pan bottom (15mm mild steel and 3 mm AISI 316 stainless steel). Insulated and counterbalanced lid. Water mixing unit included. Unit to include food tap. The electric heating elements are mounted under the well. Safety thermostat protects the pan from overheating. A precise, electronic control of pan bottom temperature ensures fast reaction and exact adherence to preselected cooking temperatures between 50° and 250°C. TOUCH control panel. SOFT function. Possibility to store recipes in single or multiphase cooking process, with different temperature settings. Built in temperature sensors for precise control of cooking process. IPX6 water resistant. Configuration: Standing against a wall. Installation options (not included): floor mounted on 200mm high feet or a plinth which can be either steel or masonry construction.

APPROVAL:

Main Features

- Multifunctional cooking appliance used for roasting, pot-roasting, braising, simmering, boiling and steaming.
- Square inner kettle allows working with stacked Gastronorm containers, which facilitate loading and unloading operations.
- Easy to clean cooking surface due to large-radius edges and corners.
- Thermoblock heating system for optimal temperature distribution and high temperature stability.
- Pan bottom with two individually adjustable heating zones, each with a temperature sensor.
- Large capacity food tap enables safe and effortless discharging of contents.
- Discharge tap is very easy to disassemble and clean.
- Temperature sensors provides efficient temperature control: the power is supplied as and when required to keep the set temperature value without exceeding it.
- IPX6 water resistant.
- Optimum heat distribution in the food provides best cooking results in terms of taste, colour and consistency and in terms of vitamin preserving.
- Overnight cooking: saving electricity and time.
- Built in temperature sensor to precisely control the cooking process.
- No overshooting of cooking temperatures, fast reaction.
- USB connection to easily update the software, upload/download recipes and download HACCP data.

Construction

- External panelling and internal frame made of 1.4301 (AISI 304) stainless steel.
- Multipurpose non-stick cooking surface in 18 mm thick compound: 3 mm shot-blasted 1.4404 (AISI 316L) stainless steel surface, seamlessly welded to the mild steel bottom.
- Double-lined insulated lid in 1.4301 (AISI 304) stainless steel mounted on the cross beam of the unit, counterbalanced by a hinge that remains open in all positions.
- 15 mm thick heating layer concealed below the entire pan bottom, to provide high thermal diffusion and heat storage properties.
- 2" diameter discharge tap for rapid emptying of the well.
- Water mixing tap is available as optional accessory to make water filling and pan cleaning easier.

- Heatproof handle with non-slip surface.
- Front-mounted inclined led "TOUCH" control panel with recessed deep drawn casing, features self-explanatory display functions which guide operator throughout the cooking process: simultaneous display of actual and set temperature as well as set cooking time and remaining cooking time; real time clock; "SOFT" control for gentle heating up for delicate food; 9 power simmering levels from gentle to heavy boiling; timer for deferred start; error display for quick trouble-shooting.
- Minimised presence of narrow gaps for easier cleaning of the sides to meet the highest hygiene standards.
- Possibility to store recipes in single or multiphase cooking process, with different temperature settings.
- "Boiling" or "Braising" mode functions.
- Can be prearranged for energy optimisation or external surveillance systems (optional).
- 98% recyclable by weight; packaging material free of toxic substances.
- Lateral surface of the vessel in DIN 1.4301/AISI 304.
- GuideYou Panel - activated by the user via settings – to easily follow the multiphase recipes, granting a proper and controlled cooking and a better appliance optimization.
  The system will provide maintenance reminders, in line with ESSENTIA program, helping the user to properly take care of the product, avoiding downtimes.
- Highly-visible and bright led TOUCH control panel features user-friendly icons and intuitive self-explanatory command options. Display visualizes:
  - Actual and set temperature
  - Set and remaining cooking time
  - Pre-heating phase (if activated)
  - GuideYou Panel (if activated)
  - Deferred start
  - Soft Function to reach the target temperature smoothly
  - 9 Power Control levels from simmering to fierce boiling
  - Pressure mode (in pressure models)
  - Stirrer ON/OFF settings (in round boiling models)
  - Error codes for quick trouble-shooting
  - Maintenance reminders

User Interface & Data Management

- Connectivity ready for real time access to connected appliances from remote and data monitoring (requires optional accessory – contact the Company for more details).

Sustainability

- High-quality thermal insulation of the pan saves energy and keeps operating ambient temperature low.

Optional Accessories

The company reserves the right to make modifications to the products without prior notice. All information correct at time of printing.

High Productivity Cooking Electric Rectangular Braising Pan, 110lt, Hygienic Profile, with Backsplash & Tap

Front

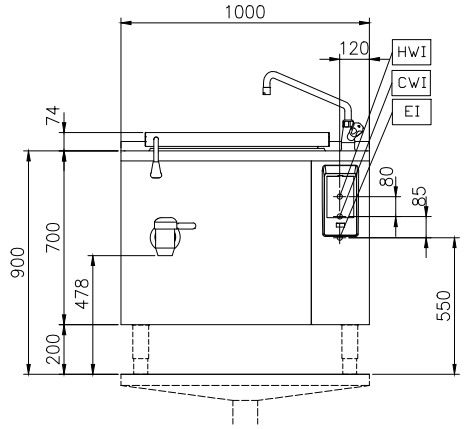

Side

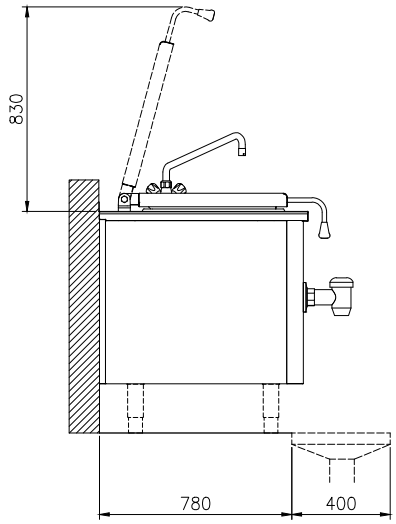

CWI1 = Cold Water inlet 1 (cleaning)
EI = Electrical inlet (power)
HWI = Hot water inlet

Top

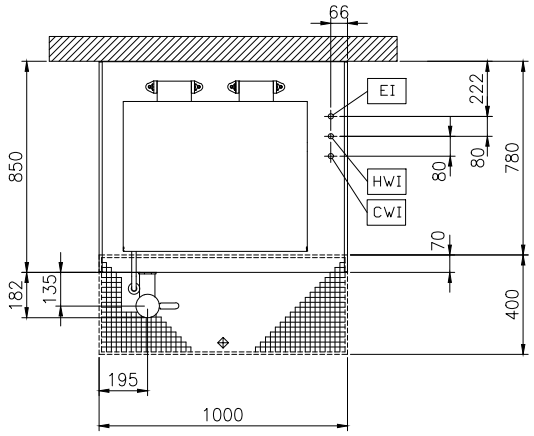

Electric

Supply voltage:	
586731 (PFEN11EKEM)	400 V/3N ph/50/60 Hz
Auxiliary:	0 kW
Total Watts:	15.5 kW

Installation:

Type of installation:	FS on concrete base;FS on feet;On base;Standing against wall;Wall mounted (with wall-kit)

Key Information:

Configuration:	Rectangular;Fixed;With splashback
Working Temperature MIN:	50 °C
Working Temperature MAX:	250 °C
Vessel (rectangle) width:	680 mm
Vessel (rectangle) height:	340 mm
Vessel (rectangle) depth:	550 mm
External dimensions, Width:	1000 mm
External dimensions, Depth:	850 mm
External dimensions, Height:	700 mm
Net weight:	140 kg
Net vessel useful capacity:	110 lt
Double jacketed lid:	✓
Heating type:	Direct

The company reserves the right to make modifications to the products without prior notice. All information correct at time of printing.

2024.10.08